www.Educate-UK.net

AQA

Please write clearly in block capitals.

Centre number | | | | | | Candidate number | | | | |

Surname _____

Forename(s) _____

Candidate signature _____
I declare this is my own work.

A-level
MATHEMATICS

Paper 3

Time allowed: 2 hours

Materials
- You must have the AQA Formulae for A-level Mathematics booklet.
- You should have a graphical or scientific calculator that meets the requirements of the specification.

Instructions
- Use black ink or black ball-point pen. Pencil should only be used for drawing.
- Fill in the boxes at the top of this page.
- Answer **all** questions.
- You must answer each question in the space provided for that question. If you need extra space for your answer(s), use the lined pages at the end of this book. Write the question number against your answer(s).
- Show all necessary working; otherwise marks for method may be lost.
- Do all rough work in this book. Cross through any work that you do not want to be marked.

Information
- The marks for questions are shown in brackets.
- The maximum mark for this paper is 100.

Advice
- Unless stated otherwise, you may quote formulae, without proof, from the booklet.
- You do not necessarily need to use all the space provided.

For Examiner's Use	
Question	Mark
1	
2	
3	
4	
5	
6	
7	
8	
9	
10	
11	
12	
13	
14	
15	
16	
17	
18	
TOTAL	

www.Educate-UK.net

Do not write outside the box

Section A

Answer **all** questions in the spaces provided.

1 The graph of $y = \arccos x$ is shown.

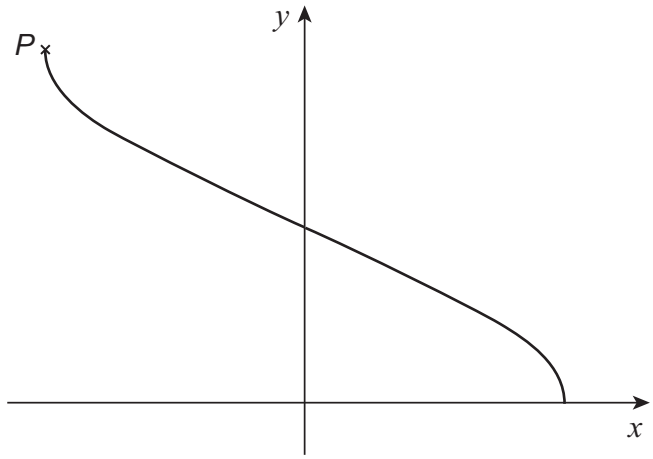

State the coordinates of the end point P.

Circle your answer.

[1 mark]

$(-\pi, 1)$ $(-1, \pi)$ $\left(-\frac{\pi}{2}, 1\right)$ $\left(-1, \frac{\pi}{2}\right)$

www.Educate-UK.net

Do not write outside the box

2 Simplify fully

$$\frac{(x+3)(6-2x)}{(x-3)(3+x)} \qquad \text{for } x \neq \pm 3$$

Circle your answer.

[1 mark]

-2 $\qquad$ 2 $\qquad$ $\dfrac{(6-2x)}{(x-3)}$ $\qquad$ $\dfrac{(2x-6)}{(x-3)}$

3 $\mathrm{f}(x) = 3x^2$

Obtain $\lim\limits_{h \to 0} \dfrac{\mathrm{f}(x+h) - \mathrm{f}(x)}{h}$

Circle your answer.

[1 mark]

$\dfrac{3h^2}{h}$ $\qquad$ x^3 $\qquad$ $\dfrac{3(x+h)^2 - 3x^2}{h}$ $\qquad$ $6x$

Turn over for the next question

www.Educate-UK.net

Do not write outside the box

4 (a) Show that the first three terms, in descending powers of x, of the expansion of

$$(2x - 3)^{10}$$

are given by

$$1024x^{10} + px^9 + qx^8$$

where p and q are integers to be found.

[3 marks]

4 (b) Find the constant term in the expansion of

$$\left(2x - \frac{3}{x}\right)^{10}$$

[2 marks]

www.Educate-UK.net

Do not write outside the box

5 A gardener is creating flowerbeds in the shape of sectors of circles.

The gardener uses an edging strip around the perimeter of each of the flowerbeds.

The cost of the edging strip is £1.80 per metre and can be purchased for any length.

One of the flowerbeds has a radius of 5 metres and an angle at the centre of 0.7 radians as shown in the diagram below.

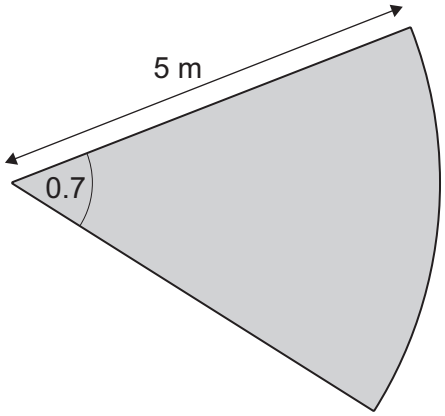

5 (a) (i) Find the area of this flowerbed.

[2 marks]

Question 5 continues on the next page

www.Educate-UK.net

Do not write outside the box

5 (a) (ii) Find the cost of the edging strip required for this flowerbed.

[3 marks]

5 (b) A flowerbed is to be made with an area of $20\,\text{m}^2$

5 (b) (i) Show that the cost, £C, of the edging strip required for this flowerbed is given by

$$C = \frac{18}{5}\left(\frac{20}{r} + r\right)$$

where r is the radius measured in metres.

[3 marks]

www.Educate-UK.net

Do not write outside the box

5 (b) (ii) Hence, show that the minimum cost of the edging strip for this flowerbed occurs when $r \approx 4.5$

Fully justify your answer.

[5 marks]

www.Educate-UK.net

Do not write outside the box

6 Given that $x > 0$ and $x \neq 25$, fully simplify

$$\frac{10 + 5x - 2x^{\frac{1}{2}} - x^{\frac{3}{2}}}{5 - \sqrt{x}}$$

Fully justify your answer.

[4 marks]

www.Educate-UK.net

Do not write outside the box

Turn over for the next question

DO NOT WRITE ON THIS PAGE
ANSWER IN THE SPACES PROVIDED

www.Educate-UK.net

Do not write outside the box

7 A building has a leaking roof and, while it is raining, water drips into a 12 litre bucket.

When the rain stops, the bucket is one third full.

Water continues to drip into the bucket from a puddle on the roof.

In the first minute after the rain stops, 30 millilitres of water drips into the bucket.

In each subsequent minute, the amount of water that drips into the bucket reduces by 2%.

During the nth minute after the rain stops, the volume of water that drips into the bucket is W_n millilitres.

7 (a) Find W_2

[1 mark]

7 (b) Explain why

$$W_n = A \times 0.98^{n-1}$$

and state the value of A.

[2 marks]

www.Educate-UK.net

Do not write outside the box

7 (c) Find the increase in the water in the bucket 15 minutes after the rain stops.

Give your answer to the nearest millilitre.

[2 marks]

7 (d) Assuming it does not start to rain again, find the maximum amount of water in the bucket.

[3 marks]

7 (e) After several hours the water has stopped dripping.

Give **two** reasons why the amount of water in the bucket is not as much as the answer found in part **(d)**.

[2 marks]

www.Educate-UK.net

Do not write outside the box

8 Given that

$$\int_{\frac{\pi}{4}}^{\frac{\pi}{3}} x \cos x \, \mathrm{d}x = a\pi + b$$

find the exact value of a and the exact value of b.

Fully justify your answer.

[6 marks]

www.Educate-UK.net

Do not write outside the box

Turn over for the next question

www.Educate-UK.net

Do not write outside the box

9 A function f is defined for all real values of x as

$$f(x) = x^4 + 5x^3$$

The function has exactly two stationary points when $x = 0$ and $x = -\frac{15}{4}$

9 (a) (i) Find $f''(x)$

[2 marks]

9 (a) (ii) Determine the nature of the stationary points.

Fully justify your answer.

[4 marks]

www.Educate-UK.net

Do not write outside the box

9 (b) State the range of values of x for which

$$f(x) = x^4 + 5x^3$$

is an increasing function.

[1 mark]

9 (c) A second function g is defined for all real values of x as

$$g(x) = x^4 - 5x^3$$

9 (c) (i) State the single transformation which maps f onto g.

[1 mark]

9 (c) (ii) State the range of values of x for which g is an increasing function.

[1 mark]

www.Educate-UK.net

Do not write outside the box

Section B

Answer **all** questions in the spaces provided.

10 Anke has collected data from 30 similar-sized cars to investigate any correlation between the age of the car and the current market value.

She calculates the correlation coefficient.

Which of the following statements best describes her answer of -1.2?

Tick (✓) **one** box.

[1 mark]

- Definitely incorrect ☐
- Probably incorrect ☐
- Probably correct ☐
- Definitely correct ☐

11 The random variable X is such that $X \sim \mathrm{B}(n, p)$

The mean value of X is 225

The variance of X is 144

Find p.

Circle your answer.

[1 mark]

0.36 0.6 0.64 0.8

www.Educate-UK.net

Do not write outside the box

12 An electoral register contains 8000 names.

A researcher decides to select a systematic sample of 100 names from the register.

Explain how the researcher should select such a sample.

[3 marks]

Turn over for the next question

www.Educate-UK.net

Do not write outside the box

13 The table below is an extract from the Large Data Set.

Propulsion Type	Region	Engine Size	Mass	CO_2	Particulate Emissions
2	London	1896	1533	154	0.04
2	North West	1896	1423	146	0.029
2	North West	1896	1353	138	0.025
2	South West	1998	1547	159	0.026
2	London	1896	1388	138	0.025
2	South West	1896	1214	130	0.011
2	South West	1896	1480	146	0.029
2	South West	1896	1413	146	0.024
2	South West	2496	1695	192	0.034
2	South West	1422	1251	122	0.025
2	South West	1995	2075	175	0.034
2	London	1896	1285	140	0.036
2	North West	1896	0	146	

13 (a) (i) Calculate the mean and standard deviation of CO_2 emissions in the table.

[2 marks]

www.Educate-UK.net

Do not write outside the box

13 (a) (ii) Any value more than 2 standard deviations from the mean can be identified as an outlier.

Determine, using this definition of an outlier, if there are any outliers in this sample of CO_2 emissions.

Fully justify your answer.

[2 marks]

13 (b) Maria claims that the last line in the table must contain two errors.

Use your knowledge of the Large Data Set to comment on Maria's claim.

[2 marks]

Turn over for the next question

www.Educate-UK.net

Do not write outside the box

14 A and B are two events such that

$$\mathrm{P}(A \cap B) = 0.1$$

$$\mathrm{P}(A' \cap B') = 0.2$$

$$\mathrm{P}(B) = 2\mathrm{P}(A)$$

14 (a) Find $\mathrm{P}(A)$

[4 marks]

14 (b) Find $\mathrm{P}(B|A)$

[2 marks]

www.Educate-UK.net

Do not write outside the box

14 (c) Determine if A and B are independent events.

[1 mark]

Turn over for the next question

www.Educate-UK.net

Do not write outside the box

15 A team game involves solving puzzles to escape from a room.

Using data from the past, the mean time to solve the puzzles and escape from one of these rooms is 65 minutes with a standard deviation of 11.3 minutes.

After recent changes to the puzzles in the room, it is claimed that the mean time to solve the puzzles and escape has changed.

To test this claim, a random sample of 100 teams is selected.

The total time to solve the puzzles and escape for the 100 teams is 6780 minutes.

Assuming that the times are normally distributed, test at the 2% level the claim that the mean time has changed.

[7 marks]

www.Educate-UK.net

Do not write outside the box

16 The discrete random variable X has the probability function

$$\mathrm{P}(X = x) = \begin{cases} c(7 - 2x) & x = 0,\ 1,\ 2,\ 3 \\ k & x = 4 \\ 0 & \text{otherwise} \end{cases}$$

where c and k are constants.

16 (a) Show that $16c + k = 1$

[2 marks]

16 (b) Given that $\mathrm{P}(X \geq 3) = \frac{5}{8}$

find the value of c and the value of k.

[2 marks]

Turn over for the next question

www.Educate-UK.net

Do not write outside the box

17 James is playing a mathematical game on his computer.

The probability that he wins is 0.6

As part of an online tournament, James plays the game 10 times.

Let Y be the number of games that James wins.

17 (a) State two assumptions, in context, for Y to be modelled as $B(10, 0.6)$

[2 marks]

17 (b) Find $\mathrm{P}(Y = 4)$

[1 mark]

17 (c) Find $\mathrm{P}(Y \geq 4)$

[2 marks]

www.Educate-UK.net

Do not write outside the box

17 (d) After practising the game, James claims that he has increased his probability of winning the game.

In a random sample of 15 subsequent games, he wins 12 of them.

Test a 5% significance level whether James's claim is correct.

[6 marks]

Turn over for the next question

www.Educate-UK.net

Do not write outside the box

18 A factory produces jars of jam and jars of marmalade.

18 (a) The weight, X grams, of jam in a jar can be modelled as a normal variable with mean 372 and a standard deviation of 3.5

18 (a) (i) Find the probability that the weight of jam in a jar is equal to 372 grams.

[1 mark]

18 (a) (ii) Find the probability that the weight of jam in a jar is greater than 368 grams.

[2 marks]

18 (b) The weight, Y grams, of marmalade in a jar can be modelled as a normal variable with mean μ and standard deviation σ

18 (b) (i) Given that $\mathrm{P}(Y < 346) = 0.975$, show that

$$346 - \mu = 1.96\sigma$$

Fully justify your answer.

[3 marks]

www.Educate-UK.net

Do not write outside the box

18 (b) (ii) Given further that

$$P(Y < 336) = 0.14$$

find μ and σ

[4 marks]

END OF QUESTIONS

www.Educate-UK.net

Do not write outside the box

There are no questions printed on this page

DO NOT WRITE ON THIS PAGE
ANSWER IN THE SPACES PROVIDED

www.Educate-UK.net

Do not write outside the box

Question number	**Additional page, if required.** **Write the question numbers in the left-hand margin.**

www.Educate-UK.net

Do not write outside the box

Question number	Additional page, if required. Write the question numbers in the left-hand margin.

www.Educate-UK.net

Do not write outside the box

Question number	**Additional page, if required.** **Write the question numbers in the left-hand margin.**

www.Educate-UK.net

Do not write outside the box

Question number	Additional page, if required. Write the question numbers in the left-hand margin.

Copyright information

For confidentiality purposes, all acknowledgements of third-party copyright material are published in a separate booklet. This booklet is published after each live examination series and is available for free download from www.aqa.org.uk.

Permission to reproduce all copyright material has been applied for. In some cases, efforts to contact copyright-holders may have been unsuccessful and AQA will be happy to rectify any omissions of acknowledgements. If you have any queries please contact the Copyright Team.

Copyright © 2021 AQA and its licensors. All rights reserved.