www.Educate-UK.net

AQA

Please write clearly in block capitals.

Centre number | | | | | | Candidate number | | | | |

Surname _____

Forename(s) _____

Candidate signature _____
I declare this is my own work.

A-level
MATHEMATICS

Paper 2

Wednesday 10 June 2020 Afternoon Time allowed: 2 hours

Materials
- You must have the AQA Formulae for A-level Mathematics booklet.
- You should have a graphical or scientific calculator that meets the requirements of the specification.

Instructions
- Use black ink or black ball-point pen. Pencil should only be used for drawing.
- Fill in the boxes at the top of this page.
- Answer **all** questions.
- You must answer each question in the space provided for that question. If you need extra space for your answer(s), use the lined pages at the end of this book. Write the question number against your answer(s).
- Show all necessary working; otherwise marks for method may be lost.
- Do all rough work in this book. Cross through any work that you do not want to be marked.

Information
- The marks for questions are shown in brackets.
- The maximum mark for this paper is 100.

Advice
- Unless stated otherwise, you may quote formulae, without proof, from the booklet.
- You do not necessarily need to use all the space provided.

For Examiner's Use	
Question	Mark
1	
2	
3	
4	
5	
6	
7	
8	
9	
10	
11	
12	
13	
14	
15	
16	
17	
18	
19	
TOTAL	

www.Educate-UK.net

Do not write outside the box

Section A

Answer **all** questions in the spaces provided.

1 Which one of these functions is decreasing for all real values of x?

Circle your answer.

[1 mark]

$f(x) = e^{x}$ $\quad$ $f(x) = -e^{1-x}$ $\quad$ $f(x) = -e^{x-1}$ $\quad$ $f(x) = -e^{-x}$

2 Which one of the following equations has no real solutions?

Tick (✓) **one** box.

[1 mark]

$\cot x = 0$ ☐

$\ln x = 0$ ☐

$|x + 1| = 0$ ☐

$\sec x = 0$ ☐

www.Educate-UK.net

Do not write outside the box

3 Find the coefficient of x^2 in the binomial expansion of $\left(2x - \frac{3}{x}\right)^8$

[3 marks]

Turn over for the next question

www.Educate-UK.net

Do not write outside the box

4 Using small angle approximations, show that for small, non-zero, values of x

$$\frac{x \tan 5x}{\cos 4x - 1} \approx A$$

where A is a constant to be determined.

[4 marks]

www.Educate-UK.net

Do not write outside the box

Turn over for the next question

DO NOT WRITE ON THIS PAGE
ANSWER IN THE SPACES PROVIDED

www.Educate-UK.net

Do not write outside the box

5 Use integration by substitution to show that

$$\int_{-\frac{1}{4}}^{6} x\sqrt{4x+1}\,\mathrm{d}x = \frac{875}{12}$$

Fully justify your answer.

[6 marks]

www.Educate-UK.net

Do not write outside the box

Turn over for the next question

www.Educate-UK.net

Do not write outside the box

6 The line L has equation

$$5y + 12x = 298$$

A circle, C, has centre (7, 9)

L is a tangent to C.

6 (a) Find the coordinates of the point of intersection of L and C.

Fully justify your answer.

[5 marks]

www.Educate-UK.net

Do not write outside the box

6 (b) Find the equation of C.

[3 marks]

Turn over for the next question

www.Educate-UK.net

Do not write outside the box

7 a and b are two positive irrational numbers.

The sum of a and b is rational.

The product of a and b is rational.

Caroline is trying to prove $\frac{1}{a}+\frac{1}{b}$ is rational.

Here is her proof:

Step 1	$\frac{1}{a}+\frac{1}{b}=\frac{2}{a+b}$
Step 2	2 is rational and $a+b$ is non-zero and rational.
Step 3	Therefore $\frac{2}{a+b}$ is rational.
Step 4	Hence $\frac{1}{a}+\frac{1}{b}$ is rational.

7 (a) (i) Identify Caroline's mistake.

[1 mark]

7 (a) (ii) Write down a correct version of the proof.

[2 marks]

www.Educate-UK.net

Do not write outside the box

7 (b) Prove by contradiction that the difference of any rational number and any irrational number is irrational.

[4 marks]

www.Educate-UK.net

Do not write outside the box

There are no questions printed on this page

DO NOT WRITE ON THIS PAGE
ANSWER IN THE SPACES PROVIDED

www.Educate-UK.net

Do not write outside the box

8 The curve defined by the parametric equations

$$x = t^2 \text{ and } y = 2t \qquad -\sqrt{2} \leq t \leq \sqrt{2}$$

is shown in **Figure 1** below.

Figure 1

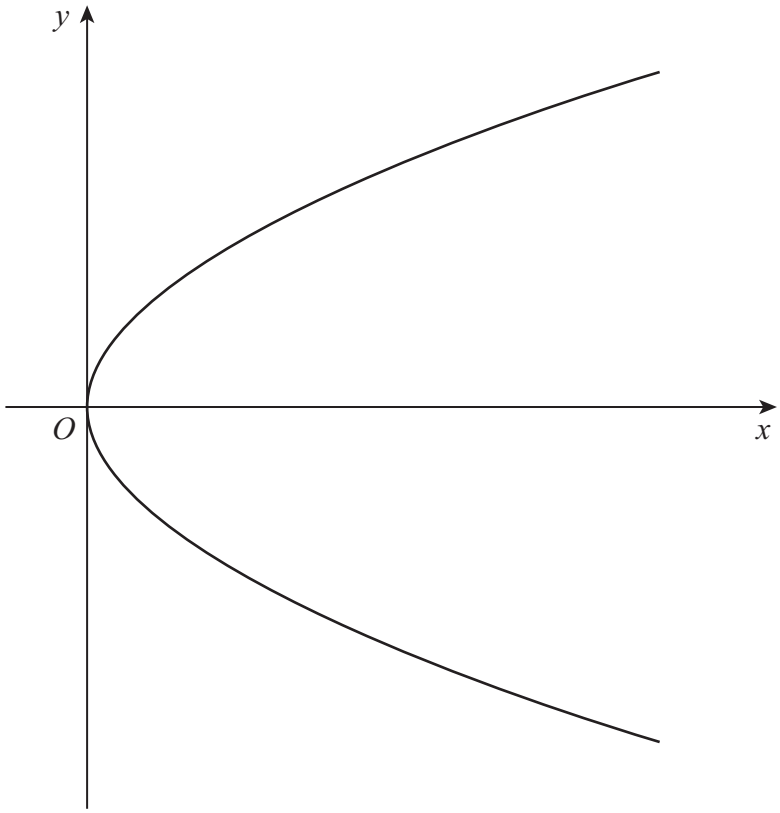

8 (a) Find a Cartesian equation of the curve in the form $y^2 = \mathrm{f}(x)$

[2 marks]

www.Educate-UK.net

Do not write outside the box

8 (b) The point A lies on the curve where $t = a$

The tangent to the curve at A is at an angle θ to a line through A parallel to the x-axis.

The point B has coordinates (1, 0)

The line AB is at an angle ϕ to the x-axis.

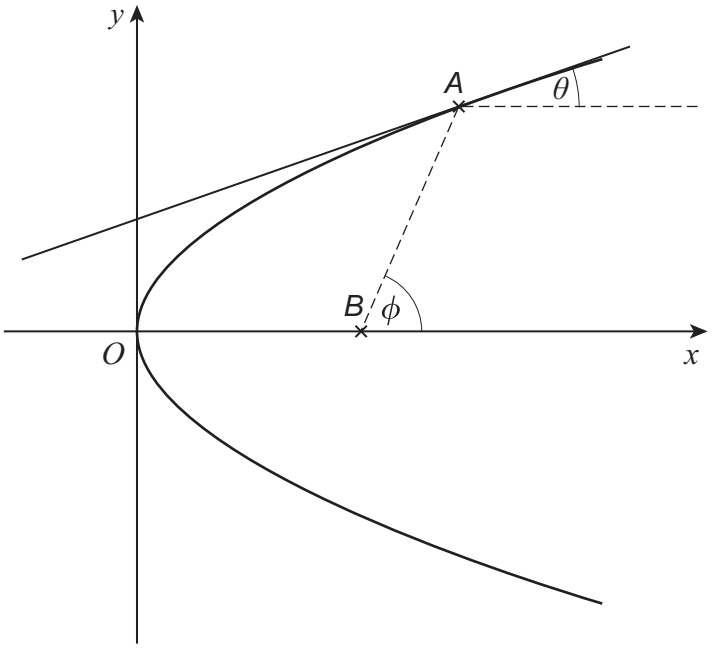

8 (b) (i) By considering the gradient of the curve, show that

$$\tan\theta = \frac{1}{a}$$

[3 marks]

www.Educate-UK.net

Do not write outside the box

8 (b) (ii) Find $\tan\phi$ in terms of a.

[2 marks]

8 (b) (iii) Show that $\tan 2\theta = \tan\phi$

[3 marks]

www.Educate-UK.net

Do not write outside the box

9 A cylinder is to be cut out of the circular face of a solid hemisphere.

The cylinder and the hemisphere have the same axis of symmetry.

The cylinder has height h and the hemisphere has a radius of R.

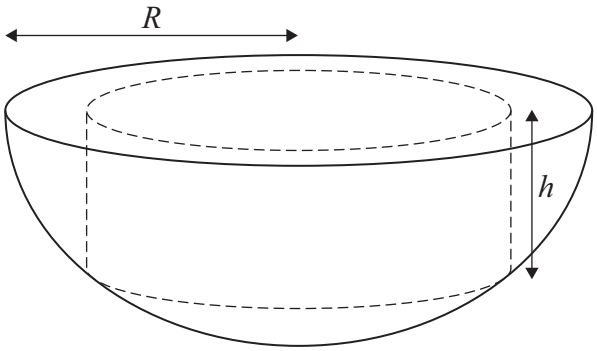

9 (a) Show that the volume, V, of the cylinder is given by

$$V = \pi R^2 h - \pi h^3$$

[3 marks]

www.Educate-UK.net

Do not write outside the box

9 (b) Find the maximum volume of the cylinder in terms of R.

Fully justify your answer.

[7 marks]

Turn over for Section B

www.Educate-UK.net

Do not write outside the box

Section B

Answer **all** questions in the spaces provided.

10 A vehicle is driven at a constant speed of $12\,\mathrm{m\,s^{-1}}$ along a straight horizontal road.

Only one of the statements below is correct.

Identify the correct statement.

Tick (✓) **one** box.

[1 mark]

- The vehicle is accelerating ☐
- The vehicle's driving force exceeds the total force resisting its motion ☐
- The resultant force acting on the vehicle is zero ☐
- The resultant force acting on the vehicle is dependent on its mass ☐

11 A number of forces act on a particle such that the resultant force is $\begin{pmatrix} 6 \\ -3 \end{pmatrix}$ N

One of the forces acting on the particle is $\begin{pmatrix} 8 \\ -5 \end{pmatrix}$ N

Calculate the total of the other forces acting on the particle.

Circle your answer.

[1 mark]

$\begin{pmatrix} 2 \\ -2 \end{pmatrix}$ N $\quad$ $\begin{pmatrix} 14 \\ -8 \end{pmatrix}$ N $\quad$ $\begin{pmatrix} -2 \\ 2 \end{pmatrix}$ N $\quad$ $\begin{pmatrix} -14 \\ 8 \end{pmatrix}$ N

www.Educate-UK.net

Do not write outside the box

12 A particle, P, is moving with constant velocity $8\mathbf{i} - 12\mathbf{j}$

A second particle, Q, is moving with constant velocity $a\mathbf{i} + 9\mathbf{j}$

Q travels in a direction which is parallel to the motion of P.

Find a.

Circle your answer.

[1 mark]

-6 $\quad$ -5 $\quad$ 5 $\quad$ 6

Turn over for the next question

www.Educate-UK.net

Do not write outside the box

13 A uniform rod, AB, has length 7 metres and mass 4 kilograms.

The rod rests on a single fixed pivot point, C, where $AC = 2$ metres.

A particle of weight W newtons is fixed at A, as shown in the diagram.

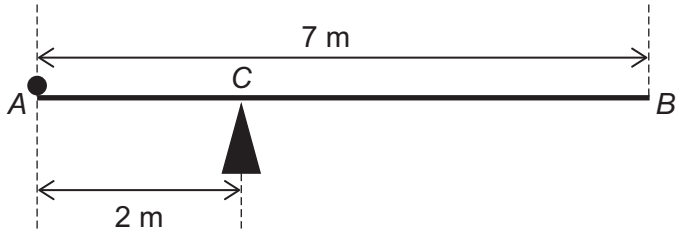

The system is in equilibrium with the rod resting horizontally.

13 (a) Find W, giving your answer in terms of g.

[2 marks]

13 (b) Explain how you have used the fact that the rod is uniform in part **(a)**.

[1 mark]

www.Educate-UK.net

Do not write outside the box

14 At time t seconds a particle, P, has position vector $\mathbf{r}$ metres, with respect to a fixed origin, such that

$$\mathbf{r} = (t^3 - 5t^2)\mathbf{i} + (8t - t^2)\mathbf{j}$$

14 (a) Find the exact speed of P when $t = 2$

[4 marks]

14 (b) Bella claims that the magnitude of acceleration of P will never be zero.

Determine whether Bella's claim is correct.

Fully justify your answer.

[3 marks]

www.Educate-UK.net

Do not write outside the box

15 A particle is moving in a straight line with velocity $v\,\mathrm{m\,s^{-1}}$ at time t seconds as shown by the graph below.

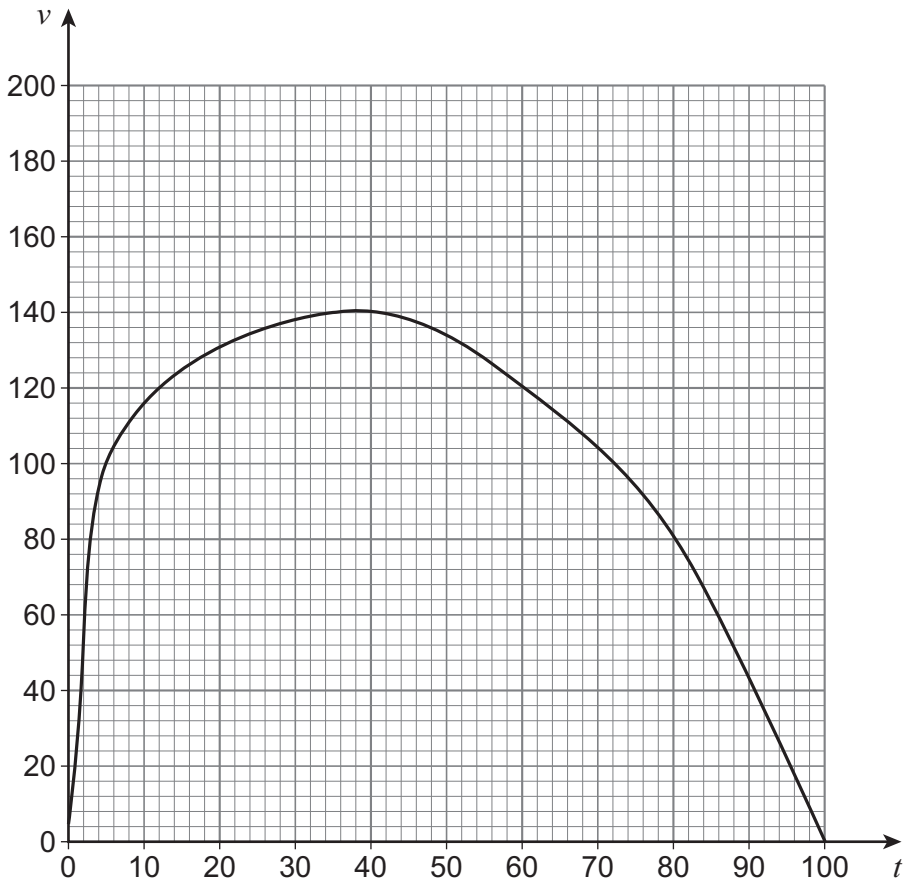

15 (a) Use the trapezium rule with four strips to estimate the distance travelled by the particle during the time period $20 \leq t \leq 100$

[4 marks]

www.Educate-UK.net

Do not write outside the box

15 (b) Over the same time period, the curve can be very closely modelled by a particular quadratic.

Explain how you could find an alternative estimate using this quadratic.

[1 mark]

Turn over for the next question

www.Educate-UK.net

Do not write outside the box

16 Two particles *A* and *B* are released from rest from different starting points above a horizontal surface.

A is released from a height of h metres.

B is released at a time t seconds after *A* from a height of kh metres, where $0 < k < 1$

Both particles land on the surface 5 seconds after *A* was released.

Assuming any resistance forces may be ignored, prove that

$$t = 5(1 - \sqrt{k})$$

Fully justify your answer.

[5 marks]

www.Educate-UK.net

Do not write outside the box

Turn over for the next question

www.Educate-UK.net

Do not write outside the box

17 A ball is projected forward from a fixed point, *P*, on a horizontal surface with an initial speed $u\,\mathrm{m\,s^{-1}}$, at an acute angle θ above the horizontal.

The ball needs to first land at a point at least d metres away from *P*.

You may assume the ball may be modelled as a particle and that air resistance may be ignored.

Show that

$$\sin 2\theta \geq \frac{dg}{u^2}$$

[6 marks]

www.Educate-UK.net

Do not write outside the box

Turn over for the next question

www.Educate-UK.net

Do not write outside the box

18 Block A, of mass 0.2 kg, lies at rest on a rough plane.

The plane is inclined at an angle θ to the horizontal, such that $\tan\theta = \frac{7}{24}$

A light inextensible string is attached to A and runs parallel to the line of greatest slope until it passes over a smooth fixed pulley at the top of the slope.

The other end of this string is attached to particle B, of mass 2 kg, which is held at rest so that the string is taut, as shown in the diagram below.

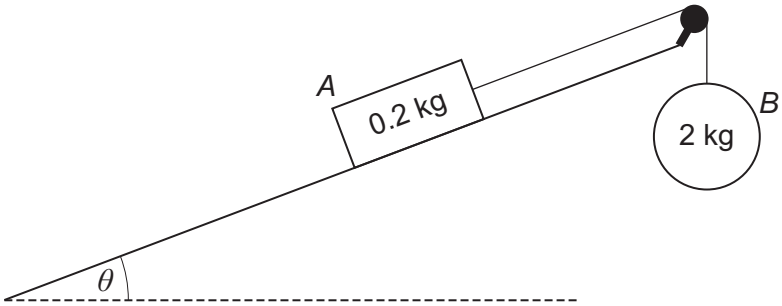

18 (a) B is released from rest so that it begins to move vertically downwards with an acceleration of $\frac{543}{625}g\,\text{m}\,\text{s}^{-2}$

Show that the coefficient of friction between A and the surface of the inclined plane is 0.17

[8 marks]

www.Educate-UK.net

Do not write outside the box

www.Educate-UK.net

Do not write outside the box

18 (b) **In this question use $g = 9.81\,\mathrm{m\,s^{-2}}$**

When A reaches a speed of $0.5\,\mathrm{m\,s^{-1}}$ the string breaks.

18 (b) (i) Find the distance travelled by A after the string breaks until first coming to rest.

[4 marks]

18 (b) (ii) State an assumption that could affect the validity of your answer to part **(b)(i)**.

[1 mark]

www.Educate-UK.net

Do not write outside the box

Turn over for the next question

DO NOT WRITE ON THIS PAGE
ANSWER IN THE SPACES PROVIDED

www.Educate-UK.net

Do not write outside the box

19 A particle moves so that its acceleration, $a\,\mathrm{m\,s^{-2}}$, at time t seconds may be modelled in terms of its velocity, $v\,\mathrm{m\,s^{-1}}$, as

$$a = -0.1v^2$$

The initial velocity of the particle is $4\,\mathrm{m\,s^{-1}}$

19 (a) By first forming a suitable differential equation, show that

$$v = \frac{20}{5 + 2t}$$

[6 marks]

www.Educate-UK.net

Do not write outside the box

19 (b) Find the acceleration of the particle when $t = 5.5$

[2 marks]

END OF QUESTIONS

www.Educate-UK.net

Do not write outside the box

There are no questions printed on this page

DO NOT WRITE ON THIS PAGE
ANSWER IN THE SPACES PROVIDED

www.Educate-UK.net

Do not write outside the box

Question number	Additional page, if required. Write the question numbers in the left-hand margin.

www.Educate-UK.net

Do not write outside the box

Question number	**Additional page, if required.** **Write the question numbers in the left-hand margin.**

Copyright information

For confidentiality purposes, all acknowledgements of third-party copyright material are published in a separate booklet. This booklet is published after each live examination series and is available for free download from www.aqa.org.uk.

Permission to reproduce all copyright material has been applied for. In some cases, efforts to contact copyright-holders may have been unsuccessful and AQA will be happy to rectify any omissions of acknowledgements. If you have any queries please contact the Copyright Team.

Copyright © 2020 AQA and its licensors. All rights reserved.